MPA SERIES

MIXER-AMPLIFIER

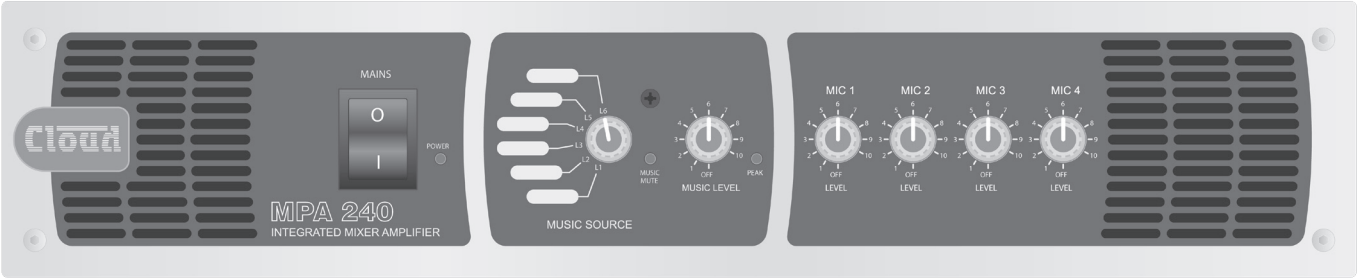

Installation and User Guide

Contents

Safety Information **4**
Safety Notes regarding Installation 4
Conformities **4**
Safety Considerations and Information 4
Caution - High Voltages 4
Caution - Mains Fuse 4
Caution - Servicing 4
General Description **5**
Schematic Diagram **5**
Front Panel Description **6**
Rear Panel Description **6**
Music Inputs **7**
Sensitivity & Gain Control 7
Music Source Select 7
Music Level Control 7
Remote Control of Music Source 7
Select and Level 7
Music Equalisation **8**
Music Priority **8**
Microphone Inputs **8**
Gain Control 8
Microphone Access Input 8
Front Panel Microphone Level Controls **8**
Microphone Equalisation **8**
Microphone Priority **9**
Microphone over music priority 9
Mic 1 over Mics 2-4 priority 9
Chime **9**
Power Amplifier Stage and Outputs **9**
Low impedance operation 9
Line Output 9
High pass filter 10
Music Mute(Fire Alarm Interface) **10**
Bose® Equalisation Modules **10**
Installation Instructions 10
General Notes **11**
Multi-zone Applications 11
EMC Considerations 11
Earthing 11
Ventilation 11
Technical Specifications **12**
Location of internal jumpers, etc **13**
Factory Default Jumper Settings 13

Safety Information

Safety Notes regarding Installation

- Do not expose the unit to water or moisture.
- Do not expose the unit to naked flames.
- Do not block or restrict any air vent.
- Do not operate the unit in ambient temperatures above 35°C.
- Do not touch any part or terminal carrying the hazardous live symbol (ϟ) while power is supplied to the unit.
- Do not perform any internal adjustments unless you are qualified to do so and fully understand the hazards associated with mains-operated equipment.
- The unit has no user-serviceable parts. Refer servicing to qualified service personnel.
- If the moulded plug is cut off the mains lead for any reason, the discarded plug is a potential hazard and should be disposed of in a responsible manner.

For more detailed information refer to the rear of the manual. Safety Notes

Conformities

This product conforms to the following European EMC Standards:

BS EN 55103-1:1997

BS EN 55103-2:1997

This product has been tested for use in commercial and light industrial environments. If the unit is used in controlled EMC environments, the urban outdoors, heavy industrial environments or close to railways, transmitters, overhead power lines, etc., the performance of the unit may be degraded.

The product conforms to the following European electrical safety standard:

BS EN 60065:2002

The MPA Series was developed and manufactured with high quality materials and components, which can be recycled and/or reused.

The WEEE symbol indicates that electrical and electronic equipment must be disposed of separately from normal waste at the end of its operational lifetime.

Please dispose of this product by taking it to your local collection point or recycling centre.

Safety Considerations and Information

The unit must be earthed. Ensure that the mains power supply provides an effective earth connection using a three-wire termination.

When the mains switch is in the off 'O' position the live and neutral conductors of the mains transformer are disconnected.

Caution - High Voltages

Do not touch any part or terminal carrying the hazardous live symbol (ϟ) while power is supplied to the unit.

Terminals to which the hazardous live symbol refers require installation by a qualified person.

Caution - Mains Fuse

Replace the mains fuse only with the same type and rating as marked on the rear panel.

The fuse body size is 20mm x 5mm.

Caution - Servicing

The unit contains no user serviceable parts. Refer servicing to qualified service personnel. Do not perform servicing unless you are qualified to do so.

Disconnect the power cable from the unit before removing the top panel and do not make any internal adjustments with the unit switched on.

Only reassemble the unit using bolts/screws identical to the original parts.

General Description

The Cloud MPA Series is a range of mixer-amplifiers with applications in Licensed, Retail, Leisure and similar venues.

Three models are available to suit different output power requirements (60, 120 or 240 watts); otherwise all models have identical facilities.

The mixer-amplifiers have inputs for six stereo line signals and four microphone signals. Front panel controls are provided for music source selection, music level and microphone levels. All pre-set controls are located on the rear panel with further configuration jumpers mounted on the main PCB.

A remote level control or combined level control/music source selector can be wired to the unit for installations that require remote control.

Schematic Diagram

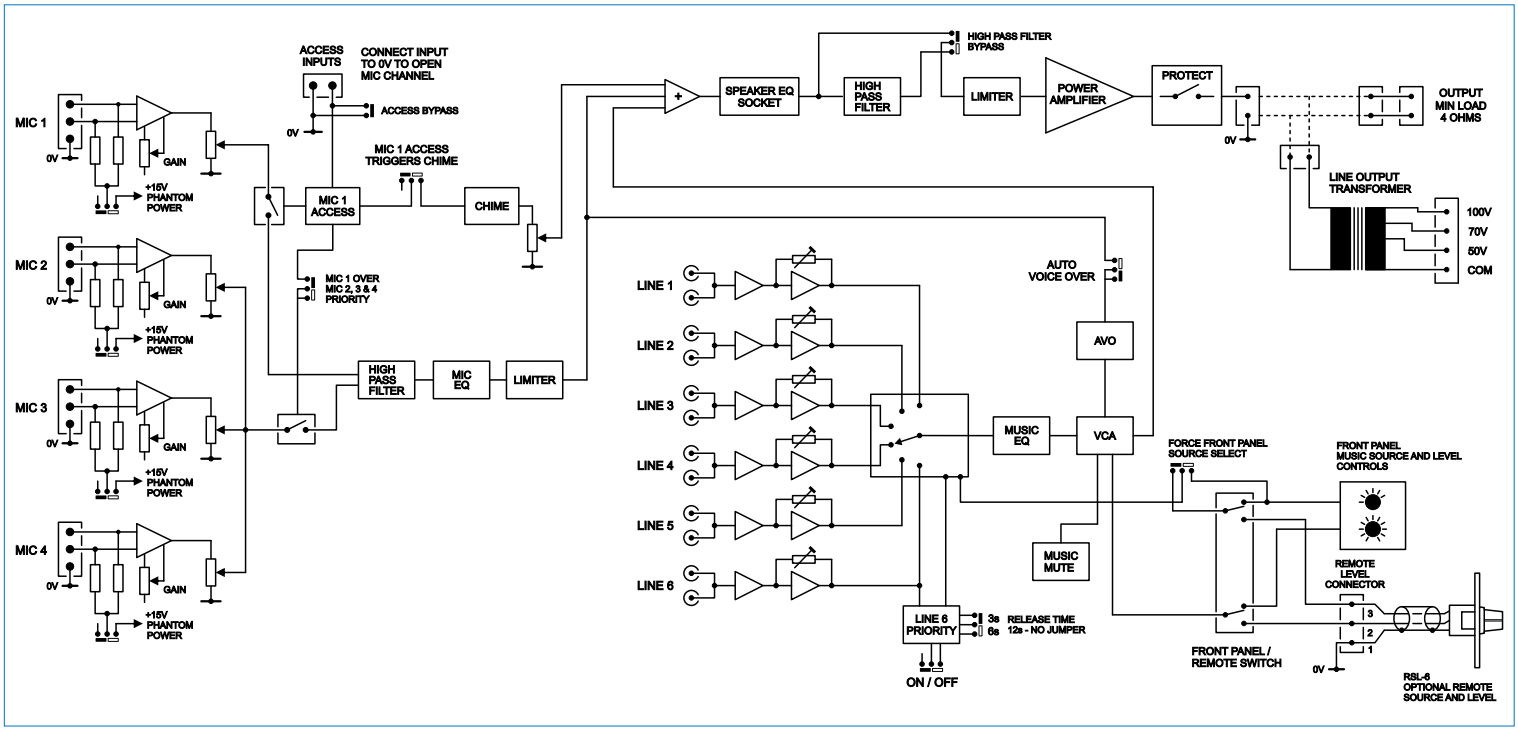

fig.1: MPA Series Schematic Diagram

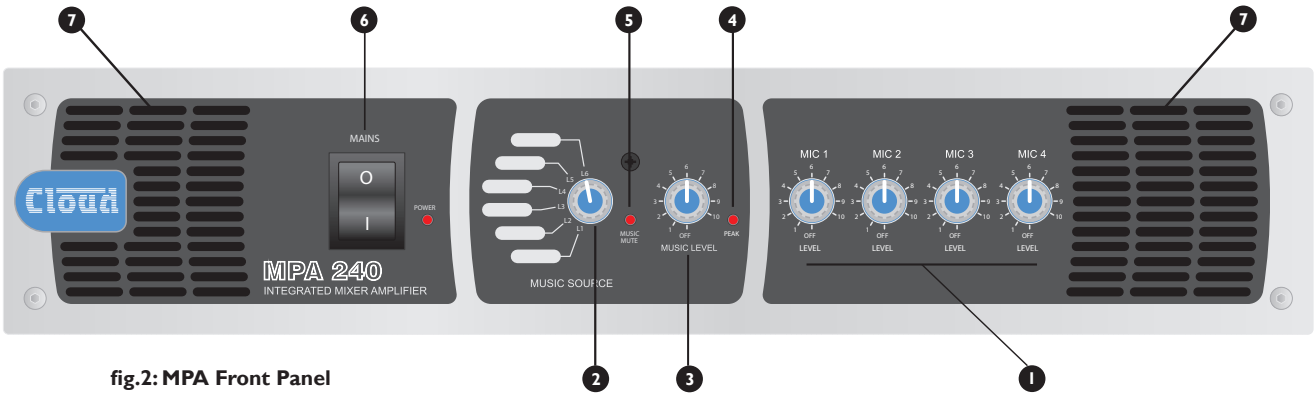

fig.2: MPA Front Panel

Front Panel Description

1. **MIC LEVEL 1 to 4** - level controls for Mic Inputs 1 to 4
2. **MUSIC SOURCE** – selects active Line Input (1 to 6)
3. **MUSIC LEVEL** – adjusts level of selected Line Input
4. **PEAK –** illuminates if Mic or Line signals level are too high
5. **MUSIC MUTE –** illuminates when external Emergency Mute is active
6. **MAINS –** AC power switch with LED
7. **Ventilation slots –** forced-air cooling air intake

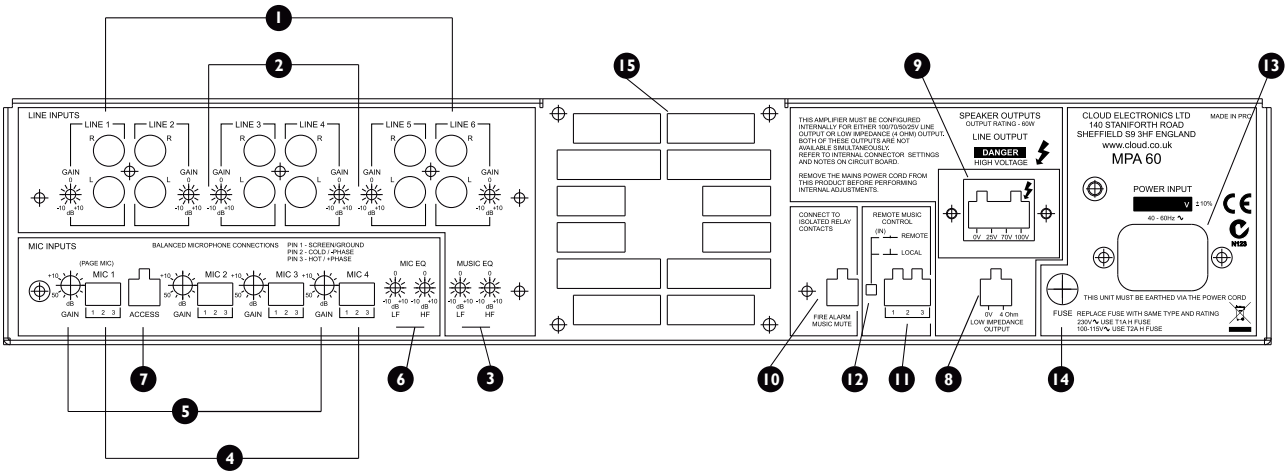

fig.3: MPA Rear Panel

Rear Panel Description

1. **LINE 1 to LINE 6 –** stereo line inputs for music sources
2. **GAIN 1 to GAIN 6 –** level trims for each line input
3. **MUSIC EQ –** LF and HF EQ adjustment for music channel
4. **MIC 1 to MIC 4 –** balanced mic inputs
5. **GAIN 1 to GAIN 4 –** level trims for each mic input
6. **MIC EQ –** LF and HF EQ adjustment for mic channel
7. **ACCESS –** external paging control input for Mic 1
8. **LOW IMPEDANCE OUTPUT –** speaker output for low-Z connection
9. **LINE OUTPUT –** for connection of 100 V/ 70 V/25 V line distribution system
10. **MUSIC MUTE –** Emergency control input for muting music source
11. **REMOTE MUSIC CONTROL –** for connection of RL-1 or RSL-6 remote control panels
12. **REMOTE/LOCAL –** disables front panel controls when remote control is in use
13. **IEC mains input**
14. **Mains fuse**
15. **Fan –** forced-air cooling air exhaust

Music Inputs

The unit has six stereo line inputs; these inputs are suitable for most music sources such as compact disc players, tape players, satellite receivers and the like. Each stereo input is summed internally to mono.

All inputs are unbalanced and use RCA phono sockets. The input impedance is 47k ohm.

Line 6 input can be configured to have priority over any other music source, see Music Priority, page 8.

Sensitivity & Gain Control

All six stereo line inputs have a preset gain control on the rear panel adjacent to the respective input sockets. The gain control has a range of 20 dB allowing the input sensitivity to be varied from -12 dBu (200 mV) to +8 dBu (2.0 V).

The preset gain control should be adjusted so that all the input signals are operating at the same level and that the front panel level control has an optimum range of control.

Music Source Select

This front panel six position switch is used to select the desired music signal. Remote control of source selection is possible with a remote control plate (RSL-6), See *fig.4*.

Music Level Control

A front panel mounted music level control is provided.

Remote control of music level is possible by connecting a remote control plate (either RSL-6 or RL-1), See *fig.4*.

Remote Control of Music Source Select and Level

The MPA Series mixer-amplifiers are compatible with standard Cloud remote control plates Types RSL-6 (music source select and level) and RL-1 (level only).

Either type of plate may be connected at the rear 3-pin 5 mm-pitch screw terminal connector (Remote Music Control), using the wiring shown in *fig.4*.

Use two-core (RSL-6 or RL-1) or single-core (RL-1 only) screened cable to connect the remote level plate (max length 100 metres).

Pressing the button adjacent to the rear panel connector activates the remote control plate and disables both the front panel level and source select controls. If an RL-1 is being used, the internal jumper J4 should be moved from its default 'SW' setting to 'FR', to override the disabling of the front panel source select switch. See *fig.7* for location of jumpers.

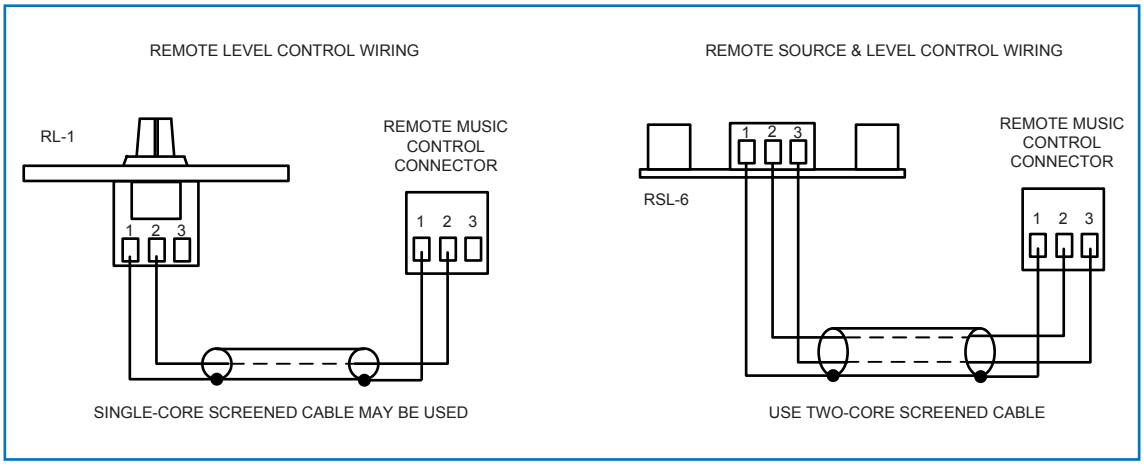

fig.4: RL-1 and RSL-6 Wiring

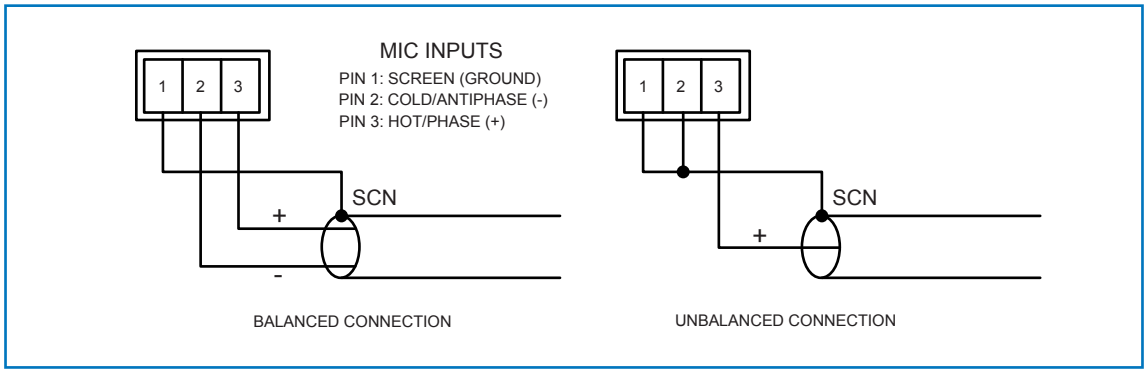

fig.5: Microphone Input Wiring

Music Equalisation

One set of independent bass and treble controls is provided for the music signals. These preset controls are located on the rear panel below the line input sockets. The treble control has a range of ±10 dB at 10 kHz and the bass control has a range of ±10 dB at 50 Hz.

Music Priority

A Juke Box, Digital Sound Store or other audio source can be given automatic priority over all other music inputs by connecting it to Line 6 input and moving internal jumpers 5A and 5B from the OFF position (factory default) to the ON. When this mode of operation is selected, the unit will operate normally until a signal is detected on Line 6, when the selected source (usually background music) is muted, allowing the source connected to Line 6 to replace it. Once the signal on line 6 stops, the selected source will smoothly restore to its former level. The time taken for the restoration is set in the factory at 3 seconds, but it may be set at 6 or 12 seconds with internal jumper J7. (3s is suitable for announcements, but the longer times may be more appropriate when a jukebox or similar is the Line 6 source.) See *fig.7* for location of jumpers.

Microphone Inputs

Four microphone inputs are provided; the microphone pre-amplifiers are an electronically balanced, transformer-less design configured for optimum low noise performance. The input impedance is greater than 2 kΩ and is suitable for microphones in the 200 Ω to 600 Ω range.

Inputs are via 3-pin 3.5 mm-pitch screw terminal connectors on the rear panel.

Connect microphones as shown in *fig.5*. Note that if using an unbalanced microphone, pins 1 and 2 should be connected together.

Phantom power is available on any or all of the mic inputs, and is activated by setting internal jumpers J9 to J12 (for mic inputs 1 to 4 respectively) to the ON position. See *fig.7* for location of jumpers.

Care should be taken to ensure that phantom power is activated only when the microphone connected to the input requires external phantom power; damage to the microphone may result otherwise.

Gain Control

A mic gain control (of the preset type) is provided adjacent to each input connector.

The gain can be adjusted from 10 dB to 50 dB. A high overload margin is maintained at all gain settings.

Microphone Access Input

Mic input 1 is equipped with an external access control input; this is a 2-pin 5 mm-pitch screw terminal connector adjacent to the Mic input 1 connector. The access input is primarily intended to provide compatibility with paging microphones and their associated switching arrangements. By default, the access function is bypassed.

To use the function, it must be enabled by moving internal jumper J13 from its default ON setting to OFF. See *fig.7* for location of jumpers. Once enabled, the microphone input is muted while the pins of the access connector are open-circuit. When the pins are connected together, Mic input 1 becomes active for use.

The access input can also trigger the following functions:

- Mic 1 Priority over Mics 2-4

  Activation of Mic 1 via the access input will give Mic 1 priority over Mics 2, 3 and 4 if internal jumper J8 is set to ON. See *fig.7* for location of jumpers. See also Mic 1 over Mics 2-4 priority, page 9.

- Chime

  The internal chime generator will be activated if internal jumper J1 is set to ON. See *fig.7* for location of jumpers. See also Chime, page 9.

Front Panel Microphone Level Controls

A separate level control is provided for each mic input and these provide the user with a convenient means of adjusting the audio level of the microphones.

The microphone signals are routed directly to the power stage and are unaffected by the operation of the music level control.

The gain controls on the rear panel (see Gain Control) should be set at a level where microphone distortion does not occur even when the front panel level controls are fully clockwise.

Microphone Equalisation

The four microphone inputs are summed together and are routed to the power stage via a fixed high pass filter and an adjustable EQ section. The fixed filter attenuates the signal below 100 Hz, which helps to reduce the effects of microphone handling noise.

The two preset EQ controls are on the rear panel adjacent to the mic inputs; the LF and HF controls provide ±10 dB of adjustment below 100 Hz and above 5 kHz respectively. After installation, some test announcements should be made,

ideally by the people who will normally make them. The Mic EQ should be adjusted if necessary to maximise voice clarity.

Microphone Priority

MPA Series mixer-amplifiers provide two separate microphone priority functions. One of these enables the microphones to have priority over music, the other allows Mic 1 to have priority over the other microphones.

Microphone over music priority

Fully automatic voice operated priority (VOX function) is available for the microphone signals. This function is enabled by internal jumper J6 (default setting is ON). When enabled, the music signal is automatically attenuated by 30 dB when a microphone signal is detected, allowing the message to be clearly heard. Normal music operation is restored smoothly after the announcement ends.

Note that the presence of a signal on any of the four mic inputs will operate this function.

Mic 1 over Mics 2-4 priority

If internal jumper J8 is set to ON (the default setting is OFF), Mic inputs 2, 3 and 4 will be muted whenever the Microphone Access Input is enabled. This ensures that Mic 1 will always have priority over any other microphones in use when Mic 1 is used for paging.

Note that if jumper J13 is left at its default setting of ON, Mics 2, 3 and 4 will be permanently disabled by this function, leaving Mic 1 as the only active microphone input.

Chime

The MPA Series amplifiers have an internal pre-announcement chime generator. The chime is triggered by the Microphone Access Input, if enabled by jumper J1 being set to ON. J1's default setting is OFF.

An internal preset rotary control is provided to adjust the chime volume; the front panel level controls have no effect on the chime level. See *fig.7* for locations of internal controls.

Power Amplifier Stage and Outputs

Low impedance operation

The MPA Series amplifiers are able to deliver their rated power into a 4 ohm load, as follows:

Model	Rated Power
MPA60	60 watts
MPA120	120 watts
MPA240	240 watts

The maximum output power will be reduced with higher load impedances.

When using multiple low-impedance loudspeakers (normally 8 ohms) with a single amplifier, series and/or parallel wiring should be employed to produce a total load impedance of not less than 4 ohms.

The low impedance output is available on a 2-pin 5 mm-pitch screw terminal connector on the rear panel. Note that one of the output pins is connected internally to 0 V.

Line Output

MPA Series amplifiers are fitted as standard with an output transformer that can be enabled by moving an internal connector. The transformer should be placed in circuit if the amplifier is to be used with a 100 V, 70 V or 25 V line speaker distribution system.

To convert the amplifier to high-voltage line operation, the low impedance output socket should be unplugged from CON8 on the main pcb (a short pair of heavy red and black wires), and replaced by the spare plug connected to the toroidal transformer nearer the rear of the unit (same wire types).

Note that the low-impedance output will no longer be available once the transformer is plugged in. The secondary (output side) of the transformer is permanently wired to the line output connector (a 4-pin 5 mm-pitch screw terminal type), thus the high-voltage output will be active once the internal connector change has been made. A safety cover is fitted over the connector, which may be removed to connect the speaker cable. Replace the cover after the connection has been made.

The transformer secondary has 3 line outputs: 100 V, 70 V and 25 V; whilst these have a common 0 V connection, the output is fully floating i.e. it is isolated from the rest of the amplifier. When the transformer is in use the maximum total combined load should not exceed the rated power for the amplifier model (see table above).

When this transformer is in circuit it is strongly recommended that the amplifier's 65 Hz high pass filter is set ON (see section below: High pass filter).

High pass filter

A high pass filter is provided to protect speakers, transformers etc. from the effects of low frequency signals. The filter is enabled by the internal jumper J2 (see *fig.7*). The filter reduces the output level of frequencies below 65 Hz, and ideally should be used if the line output transformer is in circuit.

Music Mute (Fire Alarm Interface)

In some installations (such as licensed premises or retail outlets within a shopping mall), there may be a local authority or fire service requirement to mute the music signals from a fire alarm control panel when an alarm condition arises. The MPA Series amplifiers include a facility to mute the music signals only (i.e., mic inputs are still active), via the Music Mute input. This is a 2-pin 5 mm-pitch screw terminal connector on the rear panel, and the contacts are fully isolated.

Activation of the Music Mute is often via a relay mounted close to the MPA Series amplifier, powered by the fire alarm control panel. Other arrangements may exist depending on the design of the fire control system and the fire alarm installation company should be consulted when making the connection. The MPA Series amplifiers will mute on either a contact closure at the Music Mute input (NO) or an open-circuit (NC). Selection of NO or NC operation is made with internal jumper J14. NO is the factory default. See *fig.6*.

Bose® Equalisation Modules

MPA Series amplifiers are compatible with single channel Bose® Series II equalisation modules. EQ modules are available to suit the following Bose® loudspeakers:

- Panaray MA12
- Panaray 402-II, 502B and 502BEX
- Panaray LT Series:
  Models 3302, 4402, 9402 and 9702.

Modules to suit other models are available – please enquire.

Installation Instructions

Refer to the pcb layout diagram (see *fig.7*) for the location of the Bose EQ module connector and its associated bypass jumper J3.

To install an EQ module, proceed as follows:

1. Switch off the power and isolate the unit from the mains.
2. Remove the top panel.
3. Remove jumper J3 from the main pcb.
4. Plug the Bose® equalisation module onto its connector; note that the connector has two notches on one side which engage with lugs on the module's mating connector to ensure correct orientation.
5. Replace the top panel.

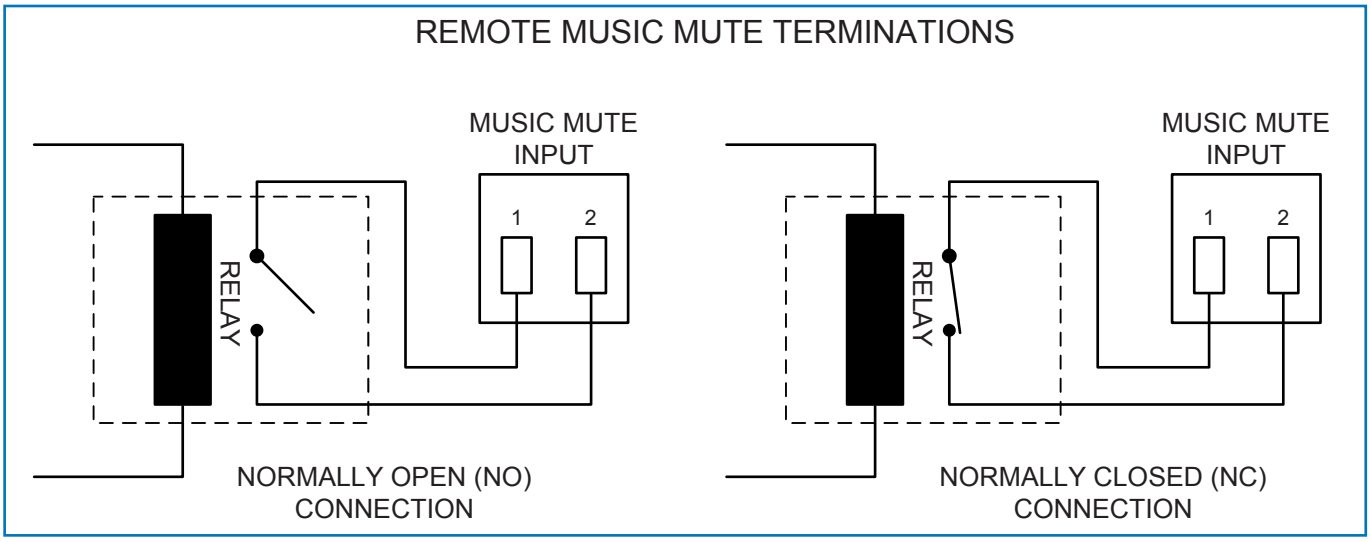

fig.6: Remote Music Mute

General Notes

Multi-zone Applications

Where the sound system specification calls for separate control in several zones, MPA Series amplifiers can be used in multiples.

Signal sources can be connected to several inputs as required, but care must be taken to ensure the output stage of the signal source is capable of driving the resulting lower input impedance.

The impedance of the line inputs (music inputs) is 47k ohms and it is reasonable to assume that most op-amp based signal sources are able to drive a 10k ohm load, allowing up to five amplifiers to be paralleled.

The input impedance of the mic inputs is 2.4k ohms, making them suitable for microphones with a nominal impedance of 600 ohms or less. A single 600 ohm microphone could therefore typically be connected to four paralleled mic inputs. If this guideline figure cannot be adhered to, the use of suitable mic or line distribution amplifiers is recommended.

To avoid any problems associated with differences in mains supply earthing, we recommend that all MPA Series amplifiers used in a multi-zone application should be co-located and connected to a common mains supply.

Note that when using multiple MPA Series amplifiers in a 19" rack, suitable ventilation arrangements must be made to ensure that lower amplifiers do not cause those above to overheat (see Ventilation for further information).

EMC Considerations

MPA Series amplifiers fully conform to the relevant electromagnetic compatibility (EMC) standards and are technically well behaved. You should experience no problems interfacing units to other items of equipment and under normal circumstances, no special precautions need to be taken.

If the unit is to be used in close proximity to potential sources of HF disturbance such as high power communication transmitters, radar stations and the like, it is suggested that input signal leads be kept as short as possible.

Always use balanced interconnections wherever possible. If the MPA Series amplifier is mounted in a 19" rack, do not locate the unit in close proximity to a powerful amplifier of any kind, which may radiate a strong magnetic field from the power transformer.

Earthing

When several mains powered units are connected together via their signal cables, there is a risk of one or more earth loops which may cause an audible hum on the system even with the gain controls set to minimum.

The 0 V rail of an MPA Series amplifier is directly coupled to the chassis ground. No interconnection problems should be encountered, but if there is any hum or other extraneous noise when source equipment is connected, the situation can generally be remedied by observing the following guidelines:

- Always connect sources using balanced connections wherever possible, with the cable screen only connected at the receiving end (amplifier input).
- Use audio isolating transformers (readily available from trade suppliers) at the inputs if necessary. These will ensure that the amplifier is electrically isolated from the source equipment.
- The signal source units should be located as close as possible to the amplifiers and the metal housing of the various units should not be electrically connected together through the equipment rack. If this is a problem, rack isolating kits are available from specialist hardware suppliers. If the problem persists, try to connect all interconnected units, including power amplifiers to a common power source to ensure a common ground is provided.

Ventilation

MPA Series amplifiers are force cooled by a thermostatically-controlled fan. The fan is operative at all times, remaining at low speed at internal temperatures below 50 °C, then increasing in speed above this temperature to a maximum speed at 70 °C.

Always allow adequate space around the amplifier(s) to allow a free flow of air through the unit(s). In 19" rack applications we recommend leaving 1U of rack space above and below each unit. Plain 1U blank panels, not slotted ventilation panels should be used, as the latter reduce the effect of forced-air cooling.

The direction of airflow in MPA Series amplifiers is from front-to-rear; it is recommended not to mix the amplifiers with other equipment employing forced-air cooling which acts in the opposite direction within the same rack.

In free standing applications we recommend fitting the feet supplied and placing the unit on a flat surface and leaving the ventilation slots on top of the unit free from any obstructions.

Technical Specifications

Line Inputs

Frequency response	Low-Z output	+0 dB/-1 dB from 20 Hz – 20 kHz (65 Hz filter switched out)
	High voltage outputs	+0 dB/-2 dB from 20 Hz – 20 kHz (65 Hz filter switched out)
Distortion	Low-Z output	<0.03% @ 1 kHz, 1 dB below full power (80 kHz bandwidth)
	High voltage outputs	<0.04% @ 1 kHz, 1 dB below full power (80 kHz bandwidth)
Sensitivity	195 mV (-12 dBu) to 2.0 V (+8 dBu)	
Input Gain control	20 dB range	
Input impedance	47k ohms	
Headroom	>20 dB	
Noise	-90 dB 22 Hz –22 kHz, at speaker output, relative to full power	
Equalisation	HF: ±10 dB/10 kHz LF: ±10 dB/50 Hz	

Microphone Inputs

Frequency response	Low-Z output	-3 dB @ 100 Hz (3rd. order filter); -1 dB @20 kHz
	High voltage output	-3 dB @ 100 Hz (3rd. order filter); -2 dB @20 kHz
Distortion	<0.03% @ 1 kHz, 1 dB below full power (80 kHz bandwidth)	
Gain range	40 dB range	
Input Impedance	>2k ohms (balanced)	
Phantom Power	15 v, switchable per-input by jumpers	
Headroom	>20 dB	
Noise	-127 dB EIN 22 Hz-22 kHz (150 ohms)	
Equalisation	HF: ±10 dB/5 kHz LF: ±10 dB/100 Hz	

Outputs

Output Power* (any output, 1kHz continuous sine wave @ <0.07% THD+N)	MPA60	60 watts
	MPA120	120 watts
	MPA240	240 watts
Protection	Fixed level signal limiter max gain reduction of 20 dB, DC protection, IV limiting & short circuit protection, switch-on delay	
Cooling	Forced-air, front-to-rear airflow, thermostatically controlled	

* see also **Low impedance operation, page 9.**

General Specifications

Power input	230V, 115V, 100V versions available		
Fuse rating	MPA60	230V	T1A H
		115/100V	T2A H
	MPA120	230V	T2A H
		115/100V	T4A H
	MPA240	230V	T4A H
		115/100V	T6.3A H
Fuse type	All models		20 mm x 5 mm
Dimensions (mm)	482.6 wide x 88 high (2U) x 300 deep (+ connectors & knobs)		
Net weight (kg)	MPA60		9.0
	MPA120		10.5
	MPA240		12.6

Location of internal jumpers, etc.

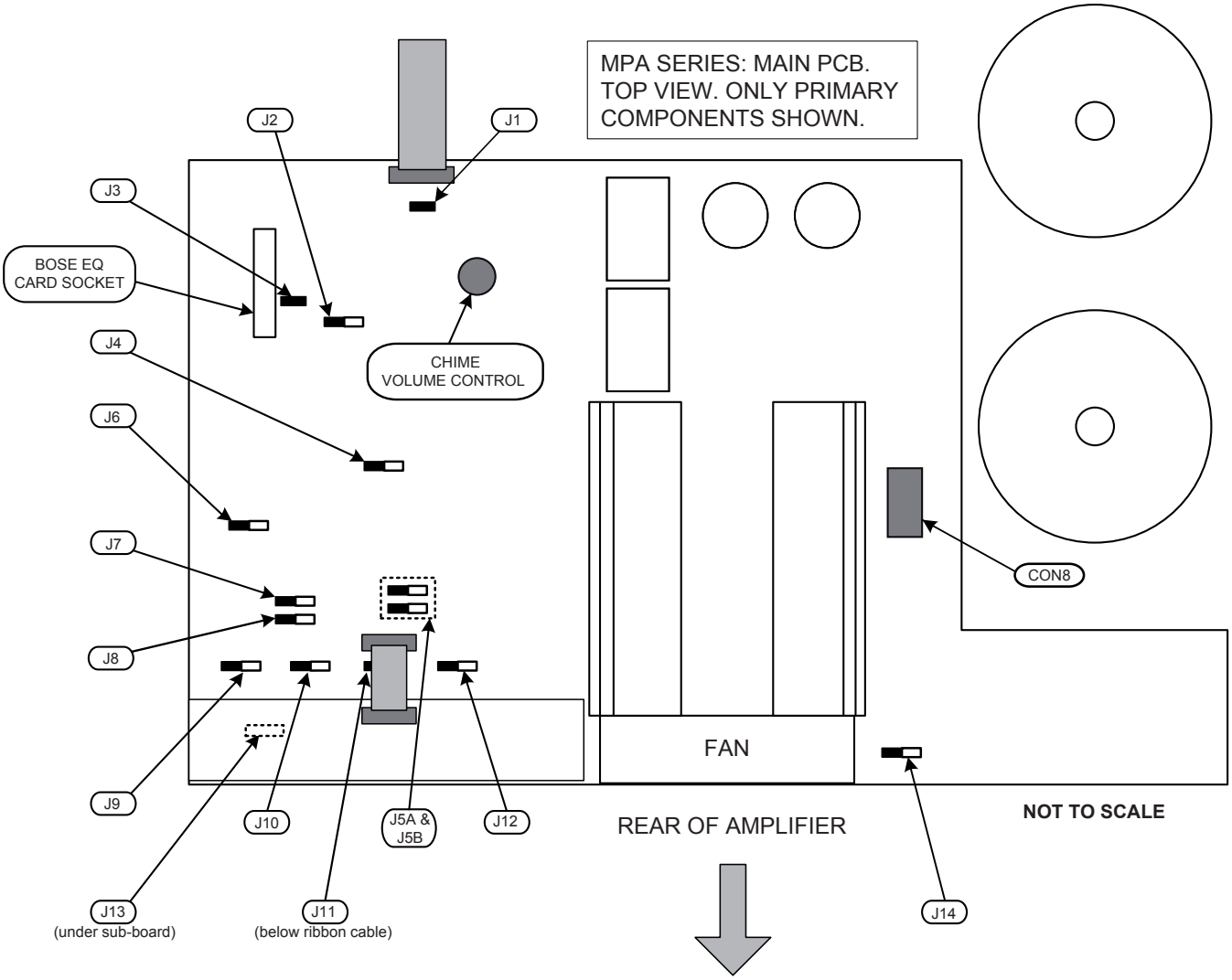

fig.7: Internal jumpers

Factory Default Jumper Settings

Jumper	Function	Default Setting
J1	Mic 1 access triggers chime	OFF
J2	65 Hz high pass filter frequency	ON
J3	EQ card socket bypass	ON
J4	Front panel source select switch disable	SW
J5 (A & B)	Line input 6 priority	OFF
J6	Mic over music priority (VOX function)	ON
J7	Line 6 priority release time 3, 6 or 12 seconds	3S
J8	Mic 1 priority over Mics 2, 3 & 4	OFF
J9	Mic 1 phantom power	OFF
J10	Mic 2 phantom power	OFF
J11	Mic 3 phantom power	OFF
J12	Mic 4 phantom power	OFF
J13	Mic 1 Access Input bypass	ON
J14	Music Mute NO or NC	NO

Bose® is a registered trademark of The Bose Corporation.

In the interest of continuing improvements Cloud Electronics Limited reserves the right to alter specifications without prior notice.

Cloud Electronics Limited
140 Staniforth Road
Sheffield S9 3HF
England
Tel: +44 (0)114 244 7051
Fax: +44 (0)114 242 5462
email: info@cloud.co.uk
web: www.cloud.co.uk